REV.	ECN.NO.	DATE
A	RELEASED	01/19-'08

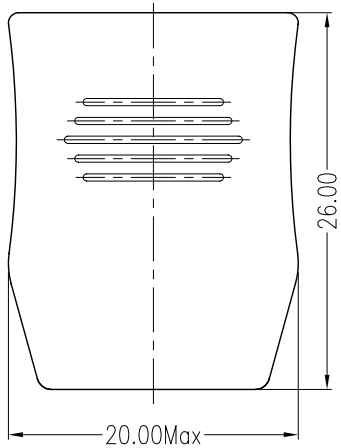

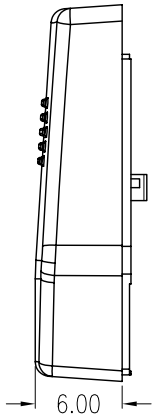

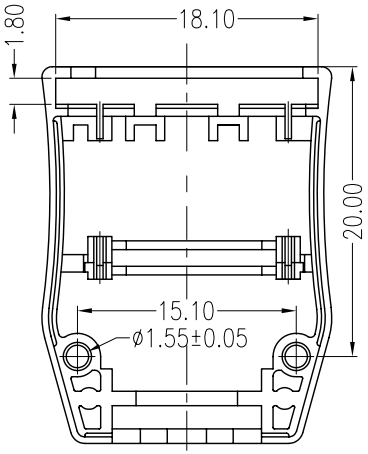

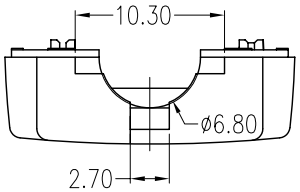

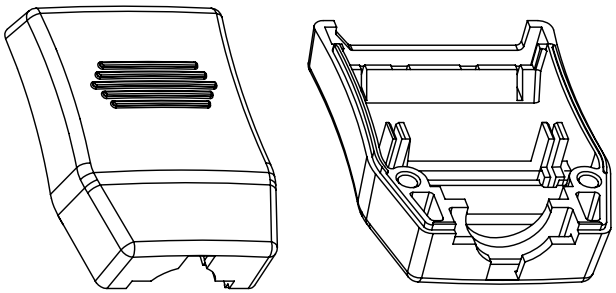

Product 3D Dwg

NOTES:

*Material

Body: ABS+PC, UL 94V-0 Rated; Color: Black.

*Environmental

Operating Temperature: -20°C to +85°C

*How To Order

7 WDPC 5 B AC 1 G

- 7:Plastic
- Series NO.
- 5:Cover
- B:Down Cover
- AC: ABS+PC
- 1:Black
- G:Gp
- Bank:NO Mark

REV					
Units	mm	Scale	3:2	Drawing By	Data
Tolerance Unless Otherwise Specified				Reviewed By	Data
.X ~ ±0.38				Approval By	Data
.XX ~ ±0.25					
.XXX ~ ±0.20					
Angle ~ ± 3°					

Wellco T&C Co., Ltd.

Date	01/19-'08	Title	DisplayPort Female Cable Use Connector Down Cover
Sheet	1 of 1		
Third Angle Projection		Drawing No.	REV A